YANMAR

PARTS CATALOG

0CD11-M08100EN

Last update Jun., 2010

PREFACE

1. This parts catalog is the 1st edition of 2TNV70-HGB2BT for TOYO DENKI.

Pub.No. : 0CD11-G08100
Published : August, 2009

2. Model name

Engine model	Vehicle	Vehicle made by
2TNV70-HGB2BT	GENERATOR	TOYO DENKI.

Directions for the Parts Catalog.

1.The parts stipulated in this Parts Catalog are not necessarily standard equipped parts.
2.Parts may change without prior notice.
3.The following is an example of the Parts Catalog format.

0CF10-G21601 29. FUEL INJECTION PUMP(W/BOOST)

(A)=4JH-DT
(B)=4JH-DTZ
(C)=4JH-DTZP
(D)=4JH-DTZA
(E)=4JH-DTZY
(F)=

① REF.	② LEV.	PARTS NO.	DESCRIPTION	Q'TY (A)	(B)	(C)	(D)	(E)	(F)	③ I	⑤ R
1	1	729595-51390	FUEL INJECTION PUMP	1	1	1	1	1			1
1-1	1	729595-51391	FUEL INJECTION PUMP	1	1	1	1	1		N	1
	(A=E00185)	(B=E00200)									
3	2	26022-060162	SCREW M 6X 16	9	9	9	9	9			
3-1 ④	2	26022-060162	SCREW M 6X 16	4	4	4	4	4		K	
	(A=E00156)	(B=E00156)	(C=E00156) (D=E00156)	(E=E00156)							
4	2	129470-51040	CAMSHAFT	1	1	1	1	1			
5	2	122710-51050	BEARING, ROLLER	2	2	2	2	2			
6	2	129470-51060	RETAINER	1	1	1	1	1			

Remarks
(1) BOOST COMPEMSATOR TYPE. OPTIONAL
PART, TO E00155,(4JH-DT, 4JH-DTZ

① Ref. No.

The Ref. No. listed may not be in accordance with the illustration Ref. No.

(Ex.) Illustration No. 1 — List Ref No. 1 (Before change) → 1- 1 (After change)

For interchangeable symbols N, R and K, illustrations for new parts may be abbreviated.

② Lev. (Level)

Level indication
The numbers below indicate the level of relativity towards the main part.
1 ----- Main parts (Assembly parts)
2 ----- Sub component included in " 1 ".
3 ----- Sub component included in " 2 ".
Note) Parts that are not for sale are partially illustrated but not listed.

③ Interchangeability Mark

When a part change takes place, one of the following interchangeability symbols is indicated beside the part.

Symbol	Interchangeability	Contents note
N	Old ←Yes / No→ New	New Part is interchangeable for Old Part but Old Part is not interchangeable for New Part.
Q	Old ←No / Yes→ New	New Part is not interchangeable for Old Part but Old Part is interchangeable for New Part.
R	Old ←Yes / Yes→ New	New/ Old Parts are both interchangeable.
S	Old ←No / No→ New	New/ Old Parts are both not interchangeable.
W		Part discontinued.
Z		Part newly added.
F		Not interchangeable by a single part but interchangeable together with related parts.
K		Changes only for used parts quantities.

④ Effective Machine No.

When a part changes, the effective Machine No. will be indicated in the (A)-(F) column.

Product Symbol	Product No.	Product Symbol	Product No.
C	Clutch No. Compressor No.	F	Machine No. (Agricultural Equip.)
D	Drive No.	M	Machine No.
E	Engine No.	Note 1)	Date

Note 1) A date may follow the symbol. (Ex.) 1996.01
Note 2) " XXX " are for parts that could not be predicted or for engine models that could not be identified.
Note 3) (A=E00185) is the E (Engine Serial Number) for the column (A) model (in this case 4JH-DT) after the parts design change.

⑤ Remarks Mark

Figures or alphabets (symbols) are entered in the remarks column.
The comments (remarks) on parts that are indicated at the bottom of the illustration are the same symbols as those stated above.

Contents

0CD11-M08100

Fig. No.	Fig. Name
2TNV70-HGB2BT	
1.	CYLINDER BLOCK
2.	GEAR HOUSING
3.	FLYWHEEL HOUSING & OIL SUMP
4.	CYLINDER HEAD & BONNET
5.	AIR CLEANER
6.	EXHAUST MANIFOLD & SILENCER
7.	CAMSHAFT & DRIVING GEAR
8.	CRANKSHAFT & PISTON
9.	LUB.OIL SYSTEM
10.	COOLING WATER SYSTEM
11.	FUEL INJECTION PUMP
12.	GOVERNOR
13.	FUEL INJECTION VALVE
14.	FUEL FILTER
15.	STARTING MOTOR
16.	GENERATOR
17.	GASKET SET & TOOLS

Fig. No.	Fig. Name

Fig.1. CYLINDER BLOCK

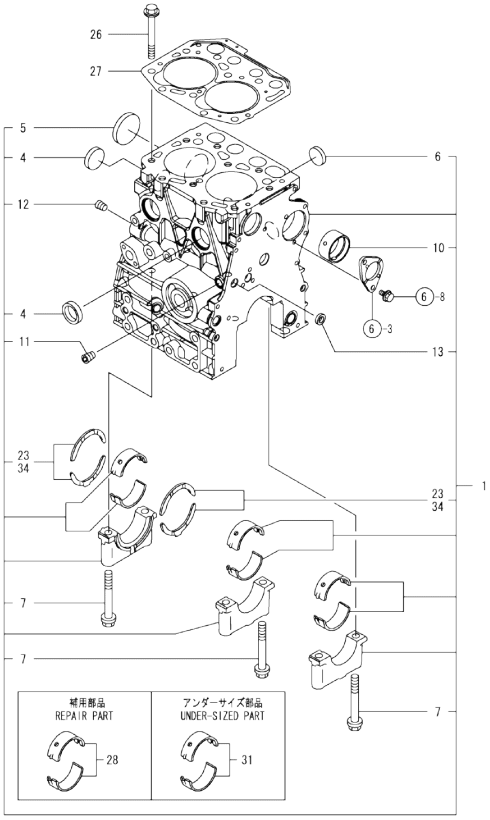

Remarks
(1) REPAIR PART.
(2) UNDER-SIZED(U.S=0.25)PART.
(3) OVER-SIZED(O.S=0.25)PART.

(A)=2TNV70-HGB2BT (D)=
(B)= (E)=
(C)= (F)=

No.	Lev.	Parts No.	Description	Q'ty (A)	(B)	(C)	(D)	(E)	(F)	I	R
1	1	719415-01561	BLOCK ASSY, CYLINDER	1							
4	2	105311-01090	PLUG, 30	3							
5	2	119623-01250	PLUG, 45	1							
6	2	119285-01990	PLUG, 25	2							
7	2	119620-02020	BOLT, METAL CAP	6							
10	2	119717-02411	BUSH, CAMSHAFT	1							
11	2	124060-01050	PLUG, PT1/8	1							
12	2	124160-01910	PLUG, PT1/4	1							
13	2	27241-120000	PLUG, 12	1							
23	2	119717-02930	BEARING, THRUST	2							
26	1	119515-01200	BOLT, HEAD	10							
27	1	119415-01330	GASKET, HEAD	1							
28	1	719717-02901	BEARING, MAIN	3							1
31	1	719717-02911	BEARING, 0.25 US	3							2
34	1	119810-02941	BEARING, THRUST 0.25	2							3

N:Old ←Yes/No→ New. Q:Old ←No/Yes→ New. R:Old ←Yes/Yes→ New. S:Old ←No/No→ New. W:Add. Z:Discontinued. F:Interchangeable by set. K:Q'ty Change

Copyright (C) YANMAR CO., LTD. All RightsReserved.

Fig.2. GEAR HOUSING

(A)=2TNV70-HGB2BT (D)=
(B)= (E)=
(C)= (F)=

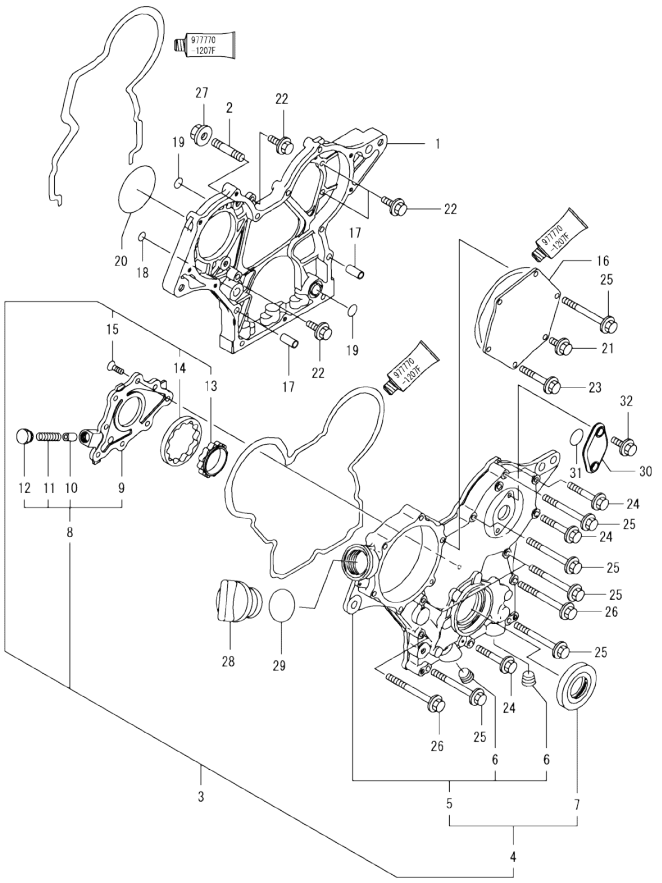

No.	Lev.	Parts No.	Description	Q'ty (A)	(B)	(C)	(D)	(E)	(F)	I	R
1	1	119717-01501	CASE, GEAR	1							
2	1	119717-01570	STUD	3							
3	1	119734-01580	CASE ASSY, GEAR	1							
4	2	719734-01510	CASE ASSY, GEAR	1							
5	3	119744-01521	COVER, GEAR CASE	1							
6	4	23876-030000	PLUG, R03	2							
7	3	119717-01800	SEAL, OIL	1							
8	2	119717-32100	COVER ASSY	1							
9	3	119717-32080	COVER	1							
10	3	129900-32130	VALVE, RELIEF	1							
11	3	129001-32320	SPRING	1							
12	3	129001-32330	PLUG	1							
13	2	119717-32110	ROTOR, INNER	1							
14	2	119717-32120	ROTOR, OUTER	1							
15	2	119802-32130	SCREW, M6X16	8							
16	1	119717-01750	COVER	1							
17	1	119660-01911	PIPE, KNOCK	4							
18	1	119624-32040	O-RING, P12.0	1							
19	1	119717-32050	O-RING, P17.0	3							
20	1	121850-51960	O-RING	1							
21	1	26106-060122	BOLT, M6X 12 PLATED	1							
22	1	26106-060162	BOLT, M6X 16 PLATED	4							
23	1	26106-060402	BOLT, M6X 40 PLATED	4							
24	1	26106-060402	BOLT, M6X 40 PLATED	3							
25	1	26106-060602	BOLT, M6X 60 PLATED	7							
26	1	26106-060652	BOLT, M6X 65 PLATED	2							
27	1	26306-080002	NUT, M8	3							
28	1	124160-01751	COVER, FILLER	1							
29	1	24311-000320	O-RING, 1AP32.0	1							
30	1	121023-01551	COVER	1							
31	1	24341-000240	O-RING, 1AS24.0	1							
32	1	26106-060162	BOLT, M6X 16 PLATED	2							

N:Old ←Yes/No→ New. Q:Old ←No/Yes→ New. R:Old ←Yes/Yes→ New. S:Old ←No/No→ New. W:Add. Z:Discontinued. F:Interchangeable by set. K:Q'ty Change

Copyright (C) YANMAR CO., LTD. All RightsReserved.

Fig.3. FLYWHEEL HOUSING & OIL SUMP

(A)=2TNV70-HGB2BT
(B)=
(C)=
(D)=
(E)=
(F)=

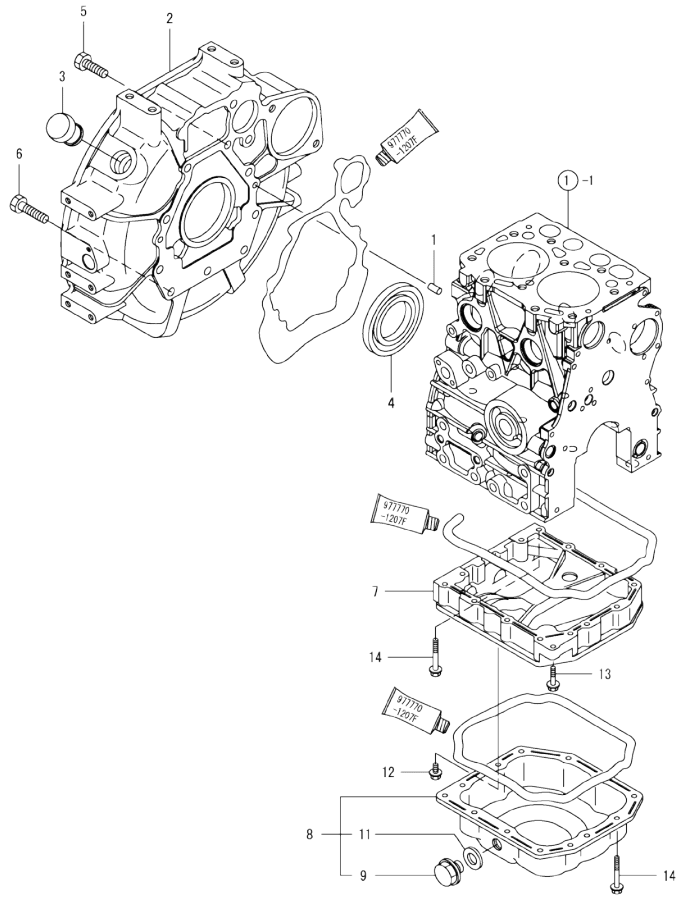

No.	Lev.	Parts No.	Description	Q'ty (A)	(B)	(C)	(D)	(E)	(F)	I	R
1	1	129100-01580	PIN, M8X16	2							
2	1	119446-01620	HOUSING, FLYWHEEL	1							
3	1	119620-01750	CAP	1							
4	1	119734-02220	SEAL, OIL	1							
5	1	26206-100252	BOLT, M10X 25 PLATED	8							
6	1	26206-100302	BOLT, M10X 30 PLATED	3							
7	1	119415-01720	SPACER, OIL SUMP	1							
8	1	119446-01770	SUMP ASSY, OIL	1							
9	2	105425-01690	PLUG, 16	1							
11	2	22190-160002	WASHER, SEAL 16	1							
12	1	26106-060122	BOLT, M6X 12 PLATED	1							
13	1	26106-060252	BOLT, M6X 25 PLATED	1							
14	1	26106-060452	BOLT, M6X 45 PLATED	13							

N:Old ◄Yes/No► New. Q:Old ◄No/Yes► New. R:Old ◄Yes/Yes► New. S:Old ◄No/No► New. W:Add. Z:Discontinued. F:Interchangeable by set. K:Q'ty Change

Copyright (C) YANMAR CO., LTD. All RightsReserved.

Fig.4. CYLINDER HEAD & BONNET

(A)=2TNV70-HGB2BT
(B)=
(C)=
(D)=
(E)=
(F)=

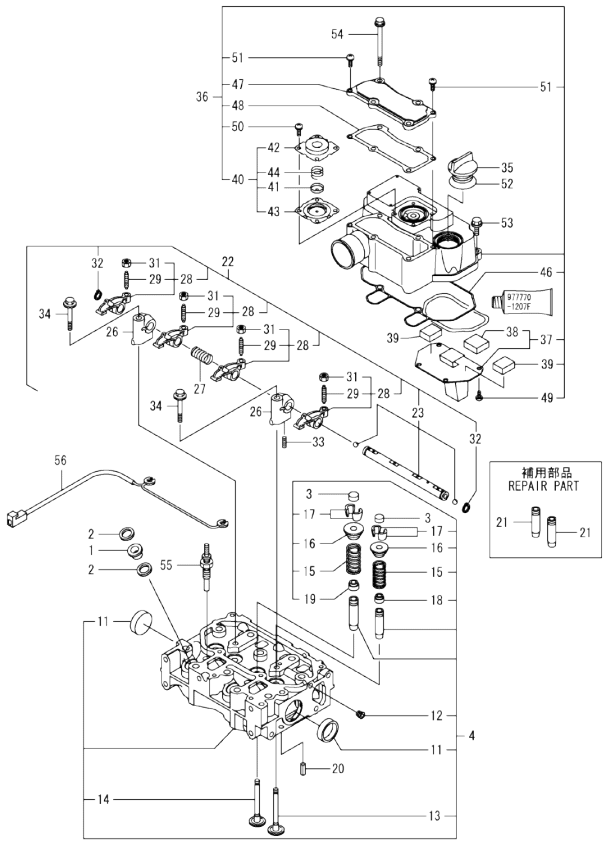

No.	Lev.	Parts No.	Description	Q'ty (A)	(B)	(C)	(D)	(E)	(F)	I	R
1	1	129901-11450	PROTECTOR, NOZZLE	2							
2	1	119600-11460	GASKET, NOZZLE	4							
3	1	105010-11490	CAP, VALVE	4							
4	1	119415-11750	HEAD ASSY, CYLINDER	1							
11	2	119285-11990	PLUG, 35	2							
12	2	23876-005000	PLUG, R005	1							
13	2	119515-11101	VALVE, INTAKE	2							
14	2	119515-11110	VALVE, EXHAUST	2							
15	2	119717-11131	SPRING, VALVE	4							
16	2	129508-11180	RETAINER, SPRING	4							
17	2	119717-11190	COTTER	8							
18	2	119717-11340	SEAL, VALVE STEM	2							
19	2	119717-11350	SEAL, VALVE STEM	2							
20	1	22351-060012	PIN, SPRING 6.0X12	2							
21	1	119515-11800	GUIDE, VALVE	4							1
22	1	119415-11200	SUPPORT ASSY, ARM	1							
23	2	119415-11240	SHAFT ASSY, ROCKER	1							
26	2	119717-11260	SUPPORT, ROCKER ARM	2							
27	2	119515-11280	SPRING	1							
28	2	119717-11650	ARM, ROCKER	4							
29	3	129150-11230	SCREW, VALVE ADJUST	4							
31	3	129150-11750	NUT, M8	4							
32	2	22242-000120	RING, 12	2							
33	2	26979-050162	SCREW, M5X16	1							
34	1	26106-080402	BOLT, M8X 40 PLATED	2							
35	1	124160-01751	COVER, FILLER	1							
36	1	119415-11380	BONNET ASSY, HEAD	1							
37	2	119717-03031	PLATE	1							
38	3	119717-03070	BAFFLE, BREATHER	1							
39	2	119717-03070	BAFFLE, BREATHER	2							
40	2	119802-03100	DIAPHRAGM ASSY	1							
41	3	119802-03110	PLATE	1							
42	3	119802-03121	COVER, DIAPHRAGM	1							
43	3	119802-03131	DIAPHRAGM	1							
44	3	119802-03141	SPRING, DIAPHRAGM	1							
46	2	119415-11310	GASKET, BONNET	1							
47	2	119415-11320	COVER, BONNET	1							
48	2	119415-11330	GASKET	1							
49	2	22857-500100	SCREW, 5X10	4							
50	2	22857-500100	SCREW, 5X10	4							
51	2	22857-500160	SCREW, 5X16	2							
52	1	24311-000320	O-RING, 1AP32.0	1							
53	1	26106-060202	BOLT, M6X 20 PLATED	2							
54	1	26106-060752	BOLT, M6X 75 PLATED	4							
55	1	119717-77800	PLUG, GLOW	2							
56	1	119415-77820	CONNECTOR, GLOW PLUG	1							

Remarks
(1) REPAIR PART.

N:Old ←Yes/No→ New. Q:Old ←No/Yes→ New. R:Old ←Yes/Yes→ New. S:Old ←No/No→ New. W:Add. Z:Discontinued. F:Interchangeable by set. K:Q'ty Change

Copyright (C) YANMAR CO., LTD. All RightsReserved.

Fig.5. AIR CLEANER

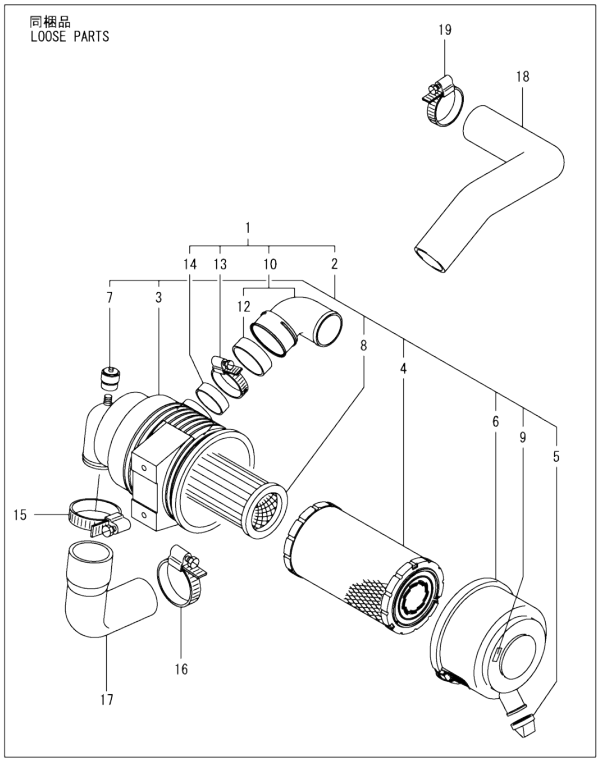

(A)=2TNV70-HGB2BT
(B)=
(C)=
(D)=
(E)=
(F)=

No.	Lev.	Parts No.	Description	Q'ty (A)	(B)	(C)	(D)	(E)	(F)	I	R
1	1	129612-12701	CLEANER ASSY, AIR	1							
2	2	119910-12601	CLEANER ASSY, AIR	1							
3	3	119910-12510	BODY, AIR CLEANER	1							
4	3	119808-12520	ELEMENT	1							
5	3	119808-12540	VALVE, UNLOADER	1							
6	3	119866-12541	COVER ASSY	1							
7	3	126650-12680	INDICATOR	1							
8	3	129051-12530	ELEMENT	1							
9	3	129612-12650	MARKING,(W)	1							
10	2	129612-12560	ELBOW	1							
12	3	129612-12590	GASKET	1							
13	2	23000-060000	CLAMP, 60	1							
14	2	129259-12570	RING	1							
15	1	23000-060000	CLAMP, 60	1							
16	1	23000-054000	CLAMP, 54	1							
17	1	119546-12550	PIPE, AIR INTAKE	1							
18	1	119746-12560	PIPE, AIR INTAKE	1							
19	1	23000-060000	CLAMP, 60	1							

N:Old ←Yes/No→ New. Q:Old ←No/Yes→ New. R:Old ←Yes/Yes→ New. S:Old ←No/No→ New. W:Add. Z:Discontinued. F:Interchangeable by set. K:Q'ty Change

Copyright (C) YANMAR CO., LTD. All RightsReserved.

0CD11-M08100 2TNV70-HGB2BT

Fig.6. EXHAUST MANIFOLD & SILENCER

(A)=2TNV70-HGB2BT
(B)=
(C)=
(D)=
(E)=
(F)=

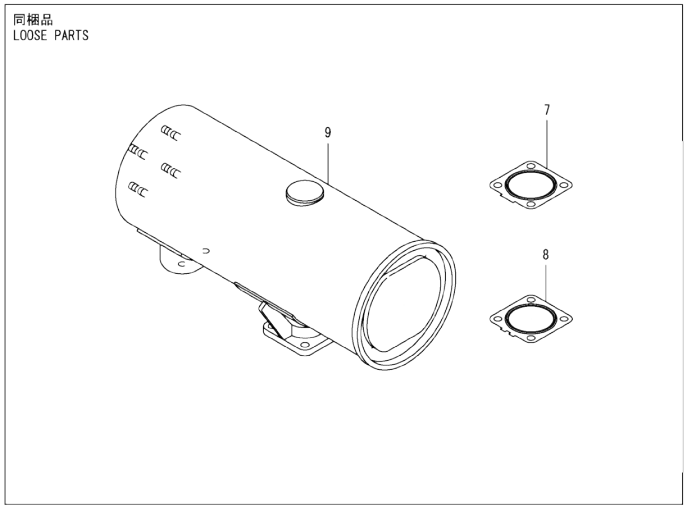

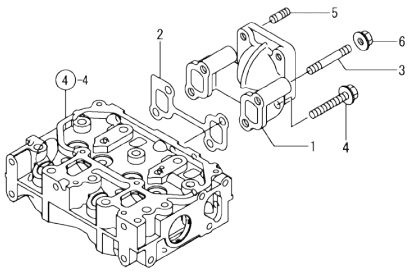

No.	Lev.	Parts No.	Description	Q'ty (A)	(B)	(C)	(D)	(E)	(F)	I	R
1	1	119415-13100	MANIFOLD, EXHAUST	1							
2	1	119415-13110	GASKET	1							
3	1	119717-13600	STUD, M8X50	2							
4	1	119802-13620	BOLT, M8X50	2							
5	1	119131-18320	STUD, M8X22	4							
6	1	26306-080002	NUT, M8	2							
7	1	119515-13200	GASKET, SILENCER	1							
8	1	129004-13200	GASKET, SILENCER	4							
9	1	129004-13500	SILENCER	1							

N:Old ←Yes/No→ New. Q:Old ←No/Yes→ New. R:Old ←Yes/Yes→ New. S:Old ←No/No→ New. W:Add. Z:Discontinued. F:Interchangeable by set. K:Q'ty Change

Copyright (C) YANMAR CO., LTD. All RightsReserved.

Fig.7. CAMSHAFT & DRIVING GEAR

(A)=2TNV70-HGB2BT
(B)=
(C)=
(D)=
(E)=
(F)=

No.	Lev.	Parts No.	Description	Q'ty (A)	(B)	(C)	(D)	(E)	(F)	I	R
1	1	119620-14200	TAPPET	4							
2	1	119515-14400	ROD, PUSH	4							
3	1	119415-14581	CAMSHAFT ASSY	1							
8	1	26106-060122	BOLT, M6X 12 PLATED	2							
9	1	119717-25050	SHAFT, IDLE	1							
10	1	119717-25101	GEAR ASSY, IDLE	1							
13	1	26106-060352	BOLT, M6X 35 PLATED	3							
14	1	119717-25911	BUSH, IDLE GEAR	1							1
15	1	129150-25301	BOLT	4							
16	1	119717-25930	GEAR, PUMP	1							

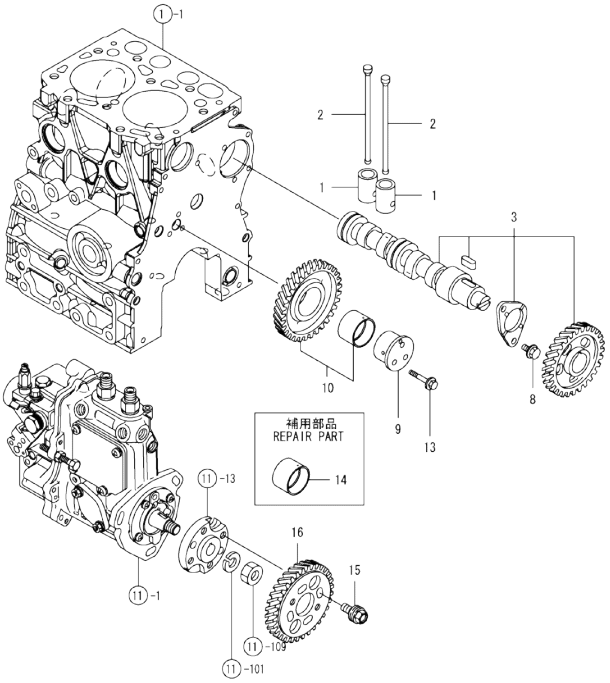

Remarks
(1) REPAIR PART.

N:Old ←Yes/No→ New. Q:Old ←No/Yes→ New. R:Old ←Yes/Yes→ New. S:Old ←No/No→ New. W:Add. Z:Discontinued. F:Interchangeable by set. K:Q'ty Change

Copyright (C) YANMAR CO., LTD. All RightsReserved.

Fig.8. CRANKSHAFT & PISTON

(A)=2TNV70-HGB2BT
(B)=
(C)=
(D)=
(E)=
(F)=

No.	Lev.	Parts No.	Description	Q'ty (A)	(B)	(C)	(D)	(E)	(F)	I	R
1	1	119415-21700	CRANKSHAFT ASSY	1							
2	2	129100-01580	PIN, M8X16	1							
5	2	22512-040120	KEY, 4X 12	1							
7	1	121111-21501	BOLT, FLYWHEEL	5							
8	1	119446-21580	FLYWHEEL ASSY	1							
10	2	119865-21600	GEAR, RING	1							
11	1	119717-21650	V-PULLEY	1							
12	1	119621-21681	BOLT, FLANGE 12X1.25	1							
13	1	119620-21941	WASHER	1							
14	1	119515-22080	PISTON ASSY	2							
16	2	119515-22500	RING SET, PISTON	2							
20	1	119515-22300	PIN, PISTON	2							
21	1	22252-000220	RING, 22	4							
22	1	119515-23000	ROD ASSY, CONNECTING	2							
25	2	119717-23200	BOLT, CONNECTING ROD	4							
26	2	119515-23601	BEARING, CRANK PIN	2							
28	1	119717-23910	BEARING, PISTON PIN	2							1
29	1	119515-23611	METAL ASSY, 0.25	2							2
31	1	119515-22900	PISTON ASSY, 0.25 OS	2							3
33	2	119515-22550	RING SET, 0.25 OS	2							3

Remarks
(1) REPAIR PART.
(2) UNDER-SIZED(U.S=0.25)PART.
(3) OVER-SIZED(O.S=0.25)PART.

N:Old ◄Yes/No► New. Q:Old ◄No/Yes► New. R:Old ◄Yes/Yes► New. S:Old ◄No/No► New. W:Add. Z:Discontinued. F:Interchangeable by set. K:Q'ty Change

Copyright (C) YANMAR CO., LTD. All RightsReserved.

0CD11-M08100 2TNV70-HGB2BT

Fig.9. LUB.OIL SYSTEM

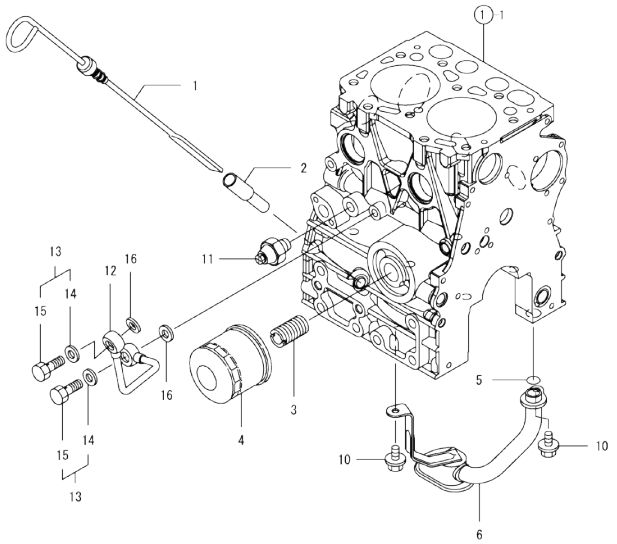

0CD11-M08100 Fig.9

(A)=2TNV70-HGB2BT (D)=
(B)= (E)=
(C)= (F)=

No.	Lev.	Parts No.	Description	Q'ty (A)	(B)	(C)	(D)	(E)	(F)	I	R
1	1	119446-34801	DIPSTICK, OIL	1							
2	1	121520-34810	GUIDE, DIPSTICK	1							
3	1	129100-35140	STUD	1							
4	1	119305-35151	FILTER ASSY, D68XL65	1							1
5	1	119717-32060	O-RING, P15.0	1							
6	1	119446-35080	PIPE ASSY, OIL INLET	1							
10	1	26106-060102	BOLT, M6X 10 PLATED	2							
11	1	114250-39450	SWITCH, 0.5KG	1							
12	1	119415-39211	PIPE, OIL	1							
13	1	129005-59830	BOLT ASSY, JOINT M8	2							
14	2	22190-080002	WASHER, SEAL 6	2							
15	2	23857-030000	BOLT, JOINT 3	2							
16	1	22190-080002	WASHER, SEAL 6	2							

Remarks
(1) REPAIR PART.

N:Old ←Yes/No→ New. Q:Old ←No/Yes→ New. R:Old ←Yes/Yes→ New. S:Old ←No/No→ New. W:Add. Z:Discontinued. F:Interchangeable by set. K:Q'ty Change

Copyright (C) YANMAR CO., LTD. All RightsReserved.

Fig.10. COOLING WATER SYSTEM

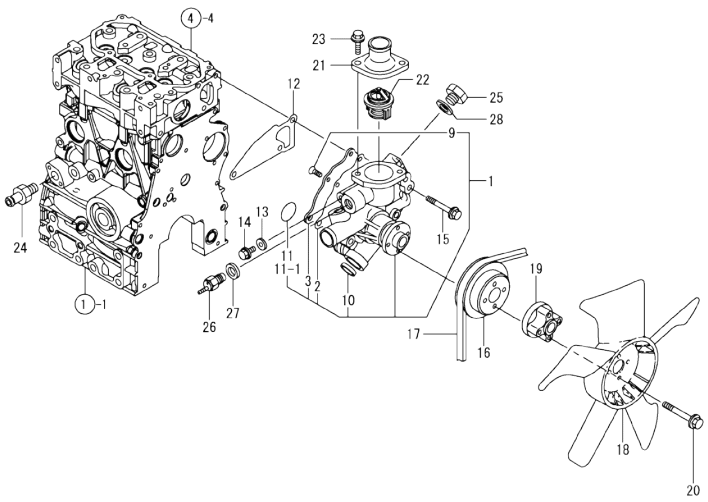

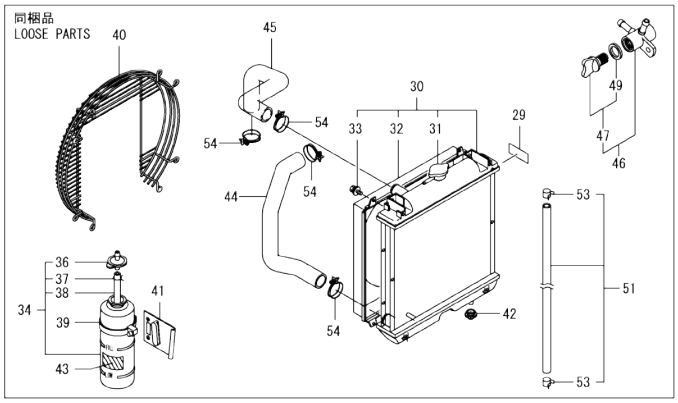

(A)=2TNV70-HGB2BT (D)=
(B)= (E)=
(C)= (F)=

No.	Lev.	Parts No.	Description	Q'ty (A)	(B)	(C)	(D)	(E)	(F)	I	R
1	1	119515-42001	PUMP ASSY, WATER	1							
1-1	1	119515-42002	PUMP ASSY, WATER	1						N	
	(A=EC6624)										
2	2	119717-42031	GASKET	1							
3	2	119515-42041	COVER	1							
9	2	26577-060122	SCREW, M6X12	4							
10	2	27241-250000	PLUG, 25	1							
11	2	119717-42320	O-RING, P26	1							
11-1	2	119C10-42320	O-RING, 2028	1						S	
	(A=EC6624)										
12	1	119515-42020	GASKET, WATER PUMP	1							
13	1	23414-080000	GASKET, 8X1.0	1							
14	1	26106-080122	BOLT, M8X 12 PLATED	1							
15	1	26106-080502	BOLT, M8X 50 PLATED	3							
16	1	119515-42350	V-PULLEY, D=110	1							
17	1	129612-42340	V-BELT, A36	1							
18	1	119265-44740	FAN, D=310X5F	1							
19	1	129457-44760	SPACER, FAN	1							
20	1	26106-060452	BOLT, M6X 45 PLATED	4							
21	1	129350-49530	COVER, THERMOSTAT	1							
22	1	119717-49800	THERMOSTAT, 71C	1							
23	1	26106-080202	BOLT, M8X 20 PLATED	2							
24	1	121550-49111	JOINT, PT1/4	1							
25	1	121450-42450	PLUG, M16	1							
26	1	121250-44901	SWITCH, THERMO 110	1							
27	1	124465-44950	GASKET, 16	1							
28	1	124465-44950	GASKET, 16	1							
29	1	172437-03391	LABEL, RADIATOR	1							
30	1	119515-44560	RADIATOR	1							
31	2	129107-44590	CAP, RADIATOR	1							
32	2	119515-44600	SHROUD	1							
33	2	26014-060122	BOLT, M6X 12	4							
34	1	124450-44510	TANK ASSY, SUB	1							
36	2	124450-44530	CAP, SUB-TANK	1							
37	2	124450-44560	CLAMP, HOSE	1							
38	2	23061-070230	PIPE, 7X 230	1							
39	1	124450-44550	BAND, SUB-TANK	1							
40	1	119802-44560	GUARD	1							
41	1	121256-44600	BRACKET, SUB TANK	1							
42	1	119255-44660	ABSORBER	2							
43	1	124764-44810	LABEL, SUB TANK	1							
44	1	119740-49060	PIPE, WATER	1							
45	1	119734-49010	PIPE, WATER	1							
46	1	129150-49100	COCK ASSY, 3-WAY	1							
47	2	129150-49080	COCK, DRAIN	1							
49	3	119629-49080	GASKET	1							
51	1	129210-49280	PIPE ASSY, DRAIN	1							
53	2	124766-59050	CLAMP, HOSE 11.5	2							
54	1	23010-038000	CLAMP, 38	4							

N:Old ←Yes/No→ New. Q:Old ←No/Yes→ New. R:Old ←Yes/Yes→ New. S:Old ←No/No→ New. W:Add. Z:Discontinued. F:Interchangeable by set. K:Q'ty Change

Copyright (C) YANMAR CO., LTD. All RightsReserved.

Fig.11. FUEL INJECTION PUMP

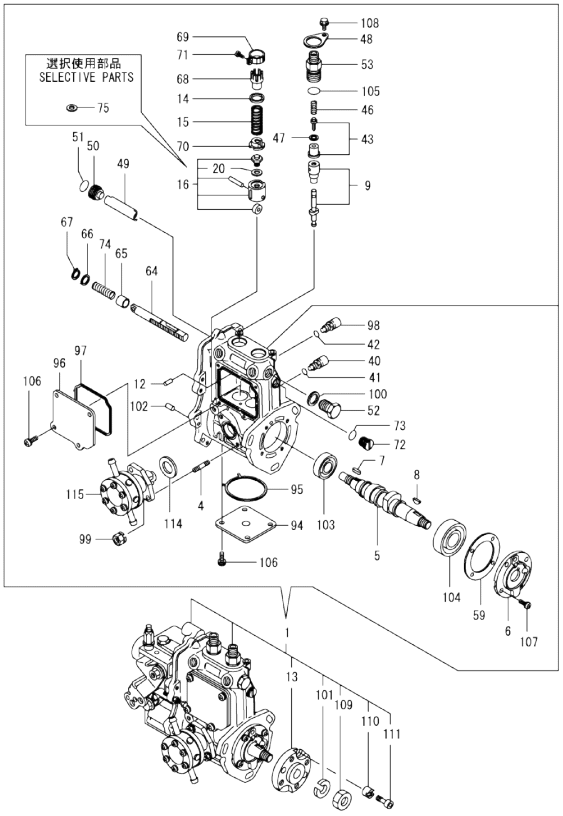

Remarks
(1) GOVERNOR ASSY(FIG.11) IS INCORPORATED IN THIS FUEL INJECTION PUMP(REF.NO.1).
(2) SELECTIVE PARTS.

(A)=2TNV70-HGB2BT (D)=
(B)= (E)=
(C)= (F)=

No.	Lev.	Parts No.	Description	Q'ty (A)	(B)	(C)	(D)	(E)	(F)	I	R
1	1	719446-51350	PUMP ASSY, INJECTION	1							1
4	2	129155-51020	STUD	2							
5	2	119415-51030	CAMSHAFT	1							
6	2	119717-51060	SUPPORT, CAMSHAFT	1							
7	2	119717-51070	KEY	1							
8	2	122710-51090	KEY	1							
9	2	119515-51100	PLUNGER ASSY	2							
12	2	129155-51140	PIN	2							
13	2	119717-51150	FLANGE	1							
14	2	158600-51170	RETAINER, SPRING	2							
15	2	119717-51190	SPRING, PLUNGER	2							
16	2	119717-51200	TAPPET ASSY	2							
20	3	129155-51600	SHIM SET, ADJUSTING	2							
40	2	158600-51270	STOPPER, TAPPET	2							
41	2	129155-51280	O-RING, S6	2							
42	2	129155-51280	O-RING, S6	1							
43	2	119717-51300	VALVE ASSY, DELIVERY	2							
46	2	119717-51330	SPRING, DELIVERY	2							
47	2	124550-51350	GASKET, DELIVERY	2							
48	2	118400-51370	LOCKING	2							
49	2	119415-51400	PROTECTOR	1							
50	2	158600-51410	PLUG, DEFLECTOR	1							
51	2	119717-51420	O-RING	1							
52	2	158600-51420	PLUG, DEFLECTOR	1							
53	2	158600-51442	VALVE ASSY, DELIVERY	2							
59	2	129155-51450	SHIM SET, ADJUSTING	1							
64	2	119415-51500	RACK, CONTROL	1							
65	2	129155-51521	BUSH, RACK	1							
66	2	129155-51530	SPACER	1							
67	2	129155-51540	CIRCLIP	1							
68	2	129155-51550	PINION, CONTROL	2							
69	2	129100-51560	PINION	2							
70	2	119717-51570	RETAINER, SPRING	2							
71	2	129100-51570	SCREW	2							
72	2	158600-51570	PLUG	1							
73	2	129155-51580	O-RING	1							
74	2	129155-51591	SPRING, RACK	1							
75	2	129155-51600	SHIM SET, ADJUSTING	2							2
94	2	119415-51700	COVER	1							
95	2	119415-51710	GASKET	1							
96	2	119415-51750	COVER	1							
97	2	119415-51760	GASKET	1							
98	2	158600-51790	STOOPER, RACK	1							
99	2	119717-51860	NUT, M6	2							
100	2	22190-160002	WASHER, SEAL 16	1							
101	2	22217-120000	WASHER, SPRING 12	1							
102	2	22351-050010	PIN, SPRING 5.0X10	2							
103	2	24101-060034	BEARING, BALL 6003	1							
104	2	24101-063034	BEARING, BALL 6303	1							
105	2	24316-000150	O-RING, 4DP15.0	2							
106	2	26022-050122	SCREW, M5X12	8							

N:Old ←Yes/No→ New. Q:Old ←No/Yes→ New. R:Old ←Yes/Yes→ New. S:Old ←No/No→ New. W:Add. Z:Discontinued. F:Interchangeable by set. K:Q'ty Change

++ CONTINUE ++

Copyright (C) YANMAR CO., LTD. All RightsReserved.

Fig.11. FUEL INJECTION PUMP

(A)=2TNV70-HGB2BT
(B)=
(C)=
(D)=
(E)=
(F)=

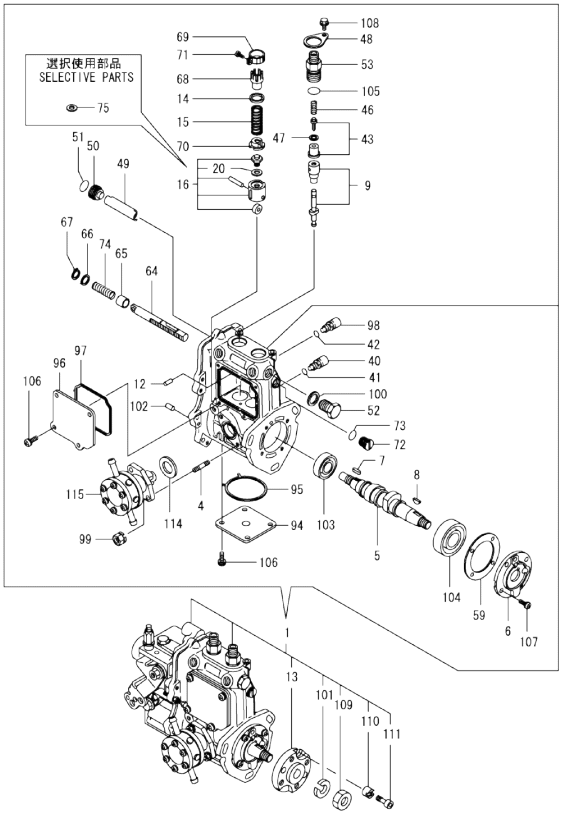

No.	Lev.	Parts No.	Description	Q'ty (A)	(B)	(C)	(D)	(E)	(F)	I	R
107	2	26022-060162	SCREW, M6X16	4							
108	2	26106-050102	BOLT, M5X 10 PLATED	2							
109	2	26716-120002	NUT, M12	1							
110	2	119717-51480	COLLAR	1							
111	2	119717-51490	BOLT	1							
114	2	129155-52051	GASKET	1							
115	2	129100-52101	PUMP ASSY, FUEL FEED	1							

Remarks
(1) GOVERNOR ASSY(FIG.11) IS INCORPORATED IN THIS FUEL INJECTION PUMP(REF.NO.1).
(2) SELECTIVE PARTS.

N:Old ←Yes/No→ New. Q:Old ←No/Yes→ New, R:Old ←Yes/Yes→ New. S:Old ←No/No→ New. W:Add. Z:Discontinued. F:Interchangeable by set. K:Q'ty Change

Copyright (C) YANMAR CO., LTD. All RightsReserved.

Fig.12. GOVERNOR

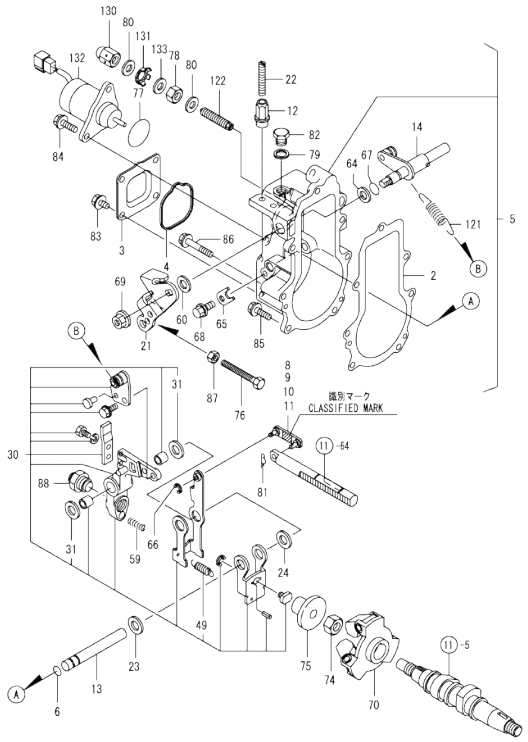

(A)=2TNV70-HGB2BT
(B)=
(C)=
(D)=
(E)=
(F)=

No.	Lev.	Parts No.	Description	Q'ty (A)	(B)	(C)	(D)	(E)	(F)	I	R
2	2	119717-61050	GASKET	1							
3	2	119717-61060	COVER, GOVERNOR CASE	1							
4	2	119717-61070	GASKET	1							
5	2	119446-61200	CASE ASSY, GOVERNOR	1							
6	3	129155-51280	O-RING, S6	1							
8	3	119717-61120	LINK, MARK :3	1							1
9	3	119717-61130	LINK, MARK 98	1							1
10	3	119717-61140	LINK, MARK 88	1							1
11	3	119717-61150	LINK, MARK 03	1							1
12	3	129209-61370	NUT, M6	1							
13	3	129052-61390	SHAFT	1							
14	3	119717-61400	SHAFT ASSY	1							
21	3	119546-61440	LEVER, CONTROL	1							
22	3	129155-61450	BOLT, LIMITER	2							
23	3	129156-61460	SHIM, T=0.6	1							
24	3	129155-61480	SPACER ASSY	1							
30	3	119717-61500	LEVER ASSY, GOVERNOR	1							
31	4	174307-51700	SHIM SET	2							
49	4	129486-61540	SPRING, SET	1							
59	3	129486-61650	SPRING, STARTING	1							
60	3	158552-61700	SHIM SET	1							
64	3	158552-61710	SHIM, T=1.0	1							
65	3	119660-61901	RETAINER, SHAFT	1							
66	3	22272-000030	RING, E- 3	1							
67	3	24341-000070	O-RING, 1AS7.0	1							
68	3	26106-060102	BOLT, M6X 10 PLATED	1							
69	3	26366-080002	NUT, M8	1							
70	2	119717-61201	WEIGHT ASSY,GOVERNOR	1							
74	2	129008-61301	NUT	1							
75	2	129155-61341	SLEEVE	1							
76	2	129155-61460	BOLT, IDLE	1							
77	2	158552-61900	O-RING	1							
78	2	129209-61920	NUT, ARB	1							
79	2	22190-100002	WASHER, SEAL 10	1							
80	2	22190-120002	WASHER, SEAL 12	2							
81	2	22372-040000	PIN, SNAP 4	1							
82	2	23887-100002	PLUG, 10	1							
83	2	26106-060102	BOLT, M6X 10 PLATED	4							
84	2	26106-060142	BOLT, M6X 14 PLATED	2							
85	2	26106-060202	BOLT, M6X 20 PLATED	4							
86	2	26106-060452	BOLT, M6X 45 PLATED	3							
87	2	26756-060002	NUT, LOCK M6	1							
88	2	119761-61560	ANGLEICH ASSY	1							
121	2	129573-61700	SPRING, GOVERNOR	1							
122	2	158601-61700	LIMITER ASSY, FUEL	1							
130	2	129209-61930	NUT, CAP	1							
131	2	129209-61970	PLATE	1							
132	2	119653-77950	SOLENOID, STOP	1							
133	2	23414-120016	GASKET, 12X1.0	1							

Remarks
* THIS FIGURE(GOVERNOR ASSY)IS INCORPORATED IN THE FUEL INJECTION PUMP ASSY(FIG.10).
(1) SELECTIVE PARTS;CERTAIN THE CLASSIFICATION MARK,THEN PLACE YOUR ORDER(REF.TO ILLUSTRATION).

N:Old ←Yes/No→ New. Q:Old ←No/Yes→ New. R:Old ←Yes/Yes→ New. S:Old ←No/No→ New. W:Add. Z:Discontinued. F:Interchangeable by set. K:Q'ty Change

Copyright (C) YANMAR CO., LTD. All RightsReserved.

Fig.13. FUEL INJECTION VALVE

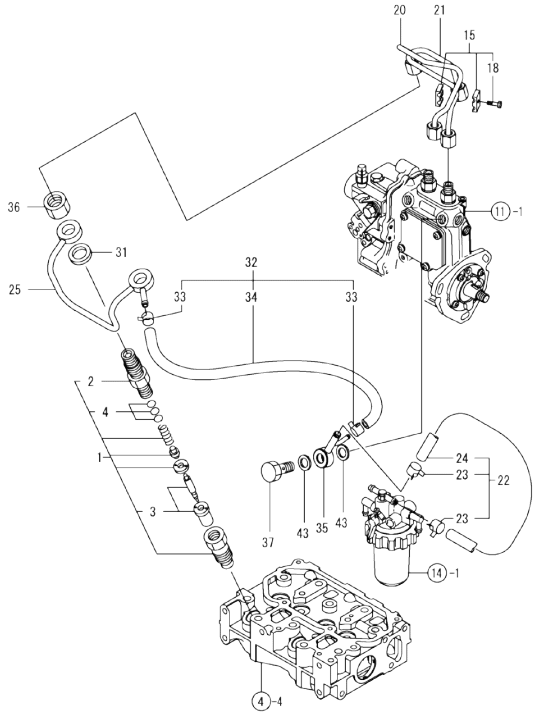

(A)=2TNV70-HGB2BT
(B)=
(C)=
(D)=
(E)=
(F)=

No.	Lev.	Parts No.	Description	Q'ty (A)	(B)	(C)	(D)	(E)	(F)	I	R
1	1	119515-53001	VALVE ASSY,INJECTION	2							
2	2	118200-53010	HOLDER, NOZZLE	2							
3	2	119515-53010	VALVE ASSY,INJECTION	2							
4	2	129901-53800	SHIM SET, ADJUSTING	2							1
15	1	119305-59120	RETAINER, PIPE	1							
18	2	129150-59131	BOLT, M4X14	1							
20	1	119415-59810	PIPE ASSY, INJECTION	1							
21	1	119415-59820	PIPE ASSY, INJECTION	1							
22	1	129210-59110	PIPE ASSY, FUEL	1							
23	2	124766-59050	CLIP, HOSE 12	2							
24	2	105025-59560	PIPE, FUEL	1							
25	1	119415-59540	PIPE ASSY, RETURN	1							
31	1	129901-59560	GASKET	2							
32	1	119540-59570	PIPE ASSY, RETURN	1							
33	2	124066-59100	CLIP, HOSE 8	2							
34	2	119540-59560	PIPE ASSY, RETURN	1							
35	1	119840-59570	JOINT	1							
36	1	119620-59700	NUT, NOZZLE	2							
37	1	119813-59950	VALVE ASSY, CHECK	1							
43	1	22190-120002	WASHER, SEAL 12	2							

Remarks
(1) REPAIR PART.

N:Old ←Yes/No→ New. Q:Old ←No/Yes→ New. R:Old ←Yes/Yes→ New. S:Old ←No/No→ New. W:Add. Z:Discontinued. F:Interchangeable by set. K:Q'ty Change

Copyright (C) YANMAR CO., LTD. All RightsReserved.

Fig.14. FUEL FILTER

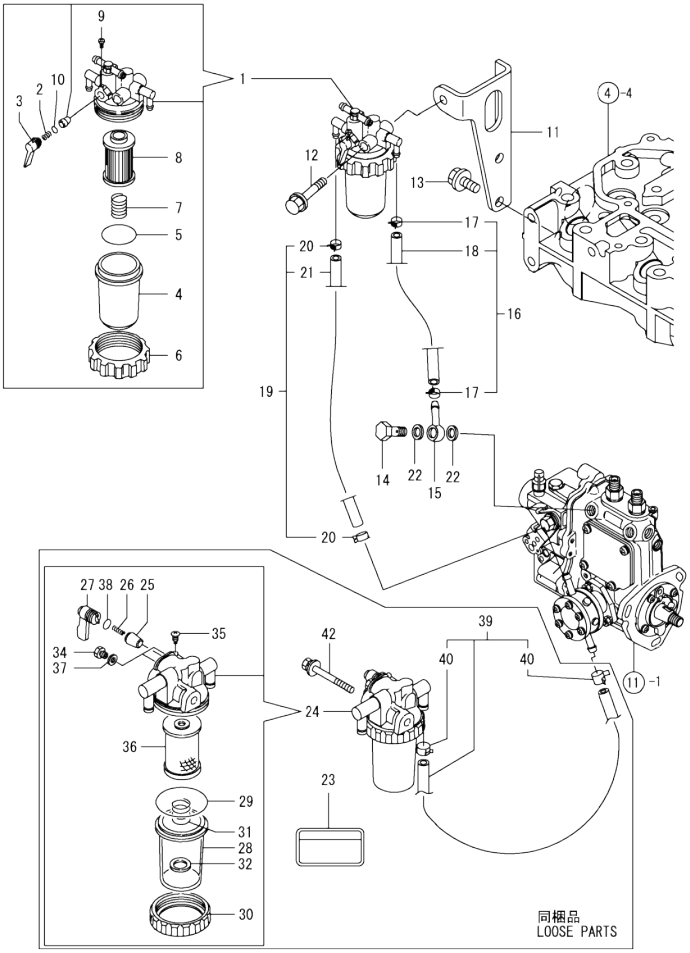

(A)=2TNV70-HGB2BT (D)=
(B)= (E)=
(C)= (F)=

No.	Lev.	Parts No.	Description	Q'ty (A)	(B)	(C)	(D)	(E)	(F)	I	R
1	1	119833-55620	FILTER ASSY, FUEL	1							
2	2	104200-55330	SPRING, VALVE	1							
3	2	119810-55340	LEVER	1							
4	2	121254-55510	COVER	1							
5	2	102103-55520	O-RING	1							
6	2	110250-55610	RING, RETAINING	1							
7	2	121250-55620	SPRING	1							
8	2	119810-55650	ELEMENT	1							
9	2	104200-55750	SCREW, M4	1							
10	2	24311-240100	O-RING, 1AP10A	1							
11	1	119717-55650	BRACKET, FILTER	1							
12	1	26014-080702	BOLT, M8X 70	1							
13	1	26106-080162	BOLT, M8X 16 PLATED	2							
14	1	103854-39140	BOLT, PIPE JOINT	1							
15	1	101304-59020	JOINT, PIPE 12	1							
16	1	129210-59050	PIPE ASSY, FUEL	1							
17	2	124766-59050	CLIP, HOSE 12	2							
18	2	105312-59510	PIPE, FUEL	1							
19	1	129210-59140	PIPE ASSY, FUEL	1							
20	2	124766-59050	CLIP, HOSE 12	2							
21	2	105230-59510	PIPE, FUEL	1							
22	1	22190-120002	WASHER, SEAL 12	2							
23	1	114110-07760	LABEL, FUEL OIL NOTI	1							
24	1	129335-55700	SEPARATOR ASSY,WATER	1							
25	2	104200-55321	VALVE, TAPER	1							
26	2	104200-55330	SPRING, VALVE	1							
27	2	104200-55341	HANDLE	1							
28	2	124064-55510	COVER	1							
29	2	102103-55520	O-RING	1							
30	2	110250-55610	RING, RETAINING	1							
31	2	121257-55720	SPRING	1							
32	2	121257-55731	FLOAT	1							
34	2	101720-55750	PLUG, 6	2							
35	2	104200-55750	SCREW, M4	1							
36	2	171081-55910	SCREEN	1							
37	2	23418-060000	GASKET, 6X1.0	2							
38	2	24311-240100	O-RING, 1AP10A	1							
39	1	129210-59140	PIPE ASSY, FUEL	1							
40	2	124766-59050	CLIP, HOSE 12	2							
42	1	26014-080702	BOLT, M8X 70	1							

N:Old ←Yes/No→ New. Q:Old ←No/Yes→ New. R:Old ←Yes/Yes→ New. S:Old ←No/No→ New. W:Add. Z:Discontinued. F:Interchangeable by set. K:Q'ty Change

Copyright (C) YANMAR CO., LTD. All RightsReserved.

Fig.15. STARTING MOTOR

(A)=2TNV70-HGB2BT
(B)=
(C)=
(D)=
(E)=
(F)=

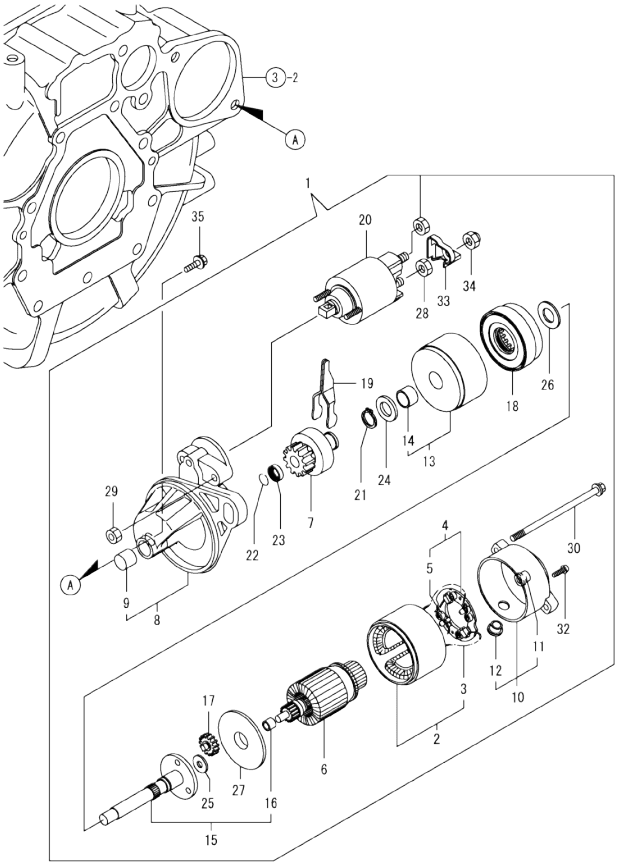

No.	Lev.	Parts No.	Description	Q'ty (A)	(B)	(C)	(D)	(E)	(F)	I	R
1	1	119515-77010	STARTER, P1.1	1							
2	2	X0281007680	YOKE ASSY	1							
3	3	X0280996180	STARTER KIT	2							
4	2	X0285105190	HOLDER ASSY	1							
5	3	X0285205030	SPRING	4							
6	2	X0282005871	ARMATURE ASSY	1							
7	2	X0283006960	CLUTCH ASSY	1							
8	2	X4284001590	HOUSING ASSY,STARTER	1							
9	3	X9491050100	BEARING, NEEDLE	1							
10	2	X0285007030	FRAME ASSY.	1							
11	3	X9491040990	BEARING	1							
12	3	X0280626010	COVER	1							
13	2	X0284105040	BEARING ASSY	1							
14	3	X9491034330	BEARING	1							
15	2	X0286105010	SHAFT ASSY	1							
16	3	X9491034320	BEARING	1							
17	2	X0286305010	GEAR	3							
18	2	X0286355010	GEAR	1							
19	2	X0287405140	LEVER	1							
20	2	X0534007800	SWITCH ASSY	1							
21	2	X9055715000	RING	1							
22	2	X9490721360	RING	1							
23	2	X0280210331	NUT	1							
24	2	X9490138110	WASHER	1							
25	2	X9490138090	WASHER	1							
26	2	X9490138100	WASHER	1							
27	2	X0284525010	PLATE	1							
28	2	X9490562360	NUT	1							
29	2	X9490560750	NUT	2							
30	2	X9490423520	BOLT, THROUGH	2							
32	2	X9490065670	SCREW, M4X6	2							
33	2	X0280335360	COVER, TERMINAL	1							
34	2	X1289510130	NUT	1							
35	1	26106-100252	BOLT, M10X 25 PLATED	2							

N:Old ←Yes/No→ New. Q:Old ←No/Yes→ New. R:Old ←Yes/Yes→ New. S:Old ←No/No→ New. W:Add. Z:Discontinued. F:Interchangeable by set. K:Q'ty Change

Copyright (C) YANMAR CO., LTD. All RightsReserved.

Fig.16. GENERATOR

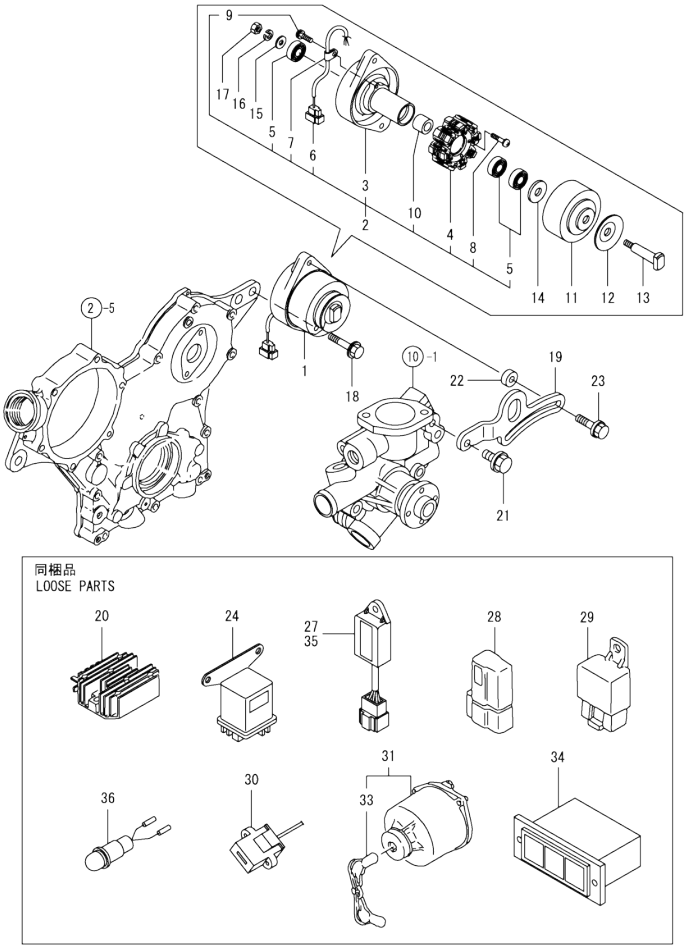

(A)=2TNV70-HGB2BT
(B)=
(C)=
(D)=
(E)=
(F)=

No.	Lev.	Parts No.	Description	Q'ty (A)	(B)	(C)	(D)	(E)	(F)	I	R
1	1	171301-77201	DYNAMO ASSY, 15A	1							
2	2	XM08137	PLATE ASSY	1							
3	3	X2A07073KA	PLATE	1							
4	3	X4A07023KB	STATOR ASSY	1							
5	3	24104-062010	BEARING, 6201UUC3	3							
6	3	X417878	COUPLER	1							
7	3	XM069000000	CLAMP	1							
8	3	XYSPS402400	SCREW	2							
9	3	XYSPS400800	SCREW	1							
10	3	XM329830000	COLLAR	1							
11	2	X3A08877KA	FLYWHEEL	1							
12	2	XM721740000	PULLEY	1							
13	2	X4A07403K01	SHAFT	1							
14	2	XM67935	WASHER	1							
15	2	XM860250000	WASHER 10	1							
16	2	XM219230000	WASHER, SPRING	1							
17	2	XM863720000	NUT	1							
18	1	26106-100452	BOLT, M10X 45 PLATED	1							
19	1	119540-77310	ADJUSTER	1							
20	1	119233-77712	LIMITER, CURRENT 15A	1							
21	1	26106-080202	BOLT, M8X 20 PLATED	1							
22	1	119940-77270	SPACER, GENERATOR	1							
23	1	129972-77341	BOLT, ADJUSTER L=50	1							
24	1	119650-77910	RELAY ASSY, GLOW	1							
27	1	129211-77920	TIMER	1							
28	1	119643-66900	DIODE	1							
29	1	119247-77100	RELAY, SAFETY	2							
30	1	119643-77900	CONNECTOR, STARTER	1							
31	1	129115-91250	SWITCH ASSY	1							
33	2	129115-91270	KEY ASSY	1							
34	1	170038-91310	UNIT, LAMP (RED)	1							
35	1	129155-77925	TIMER	1							
36	1	124732-77970	LAMP, PILOT	1							

N:Old ←Yes/No→ New. Q:Old ←No/Yes→ New. R:Old ←Yes/Yes→ New. S:Old ←No/No→ New. W:Add. Z:Discontinued. F:Interchangeable by set. K:Q'ty Change

Copyright (C) YANMAR CO., LTD. All RightsReserved.

Fig.17. GASKET SET & TOOLS

(A)=2TNV70-HGB2BT
(B)=
(C)=
(D)=
(E)=
(F)=

No.	Lev.	Parts No.	Description	Q'ty (A)	(B)	(C)	(D)	(E)	(F)	I	R
1	1	719415-92620	GASKET SET	1							1
2	2	119415-01330	GASKET, HEAD	1							
3	2	119624-32040	O-RING, P12.0	1							
4	2	119717-32050	O-RING, P17.0	3							
5	2	121850-51960	O-RING	1							
6	2	24311-000320	O-RING, 1AP32.0	2							
7	2	22190-160002	WASHER, SEAL 16	1							
8	2	129901-11450	PROTECTOR, NOZZLE	2							
9	2	119600-11460	GASKET, NOZZLE	4							
10	2	119717-11340	SEAL, VALVE STEM	2							
11	2	119717-11350	SEAL, VALVE STEM	2							
12	2	119415-11310	GASKET, BONNET	1							
13	2	119415-11330	GASKET	1							
14	2	119415-13110	GASKET	1							
15	2	119515-13200	GASKET, SILENCER	1							
16	2	119717-32060	O-RING, P15.0	1							
17	2	22190-080002	WASHER, SEAL 6	4							
18	2	119515-42020	GASKET, WATER PUMP	1							
19	2	23414-080000	GASKET, 8X1.0	1							
20	2	124465-44950	GASKET, 16	2							
21	2	129901-59560	GASKET	2							
22	2	22190-120002	WASHER, SEAL 12	4							
23	2	24341-000240	O-RING, 1AS24.0	1							
24	1	129400-92410	FLEX HORN	1							1
25	1	977770-01212	GASKET, LIQUID	1							1
26	1	721400-92102	BOX ASSY, TOOL	1							
27	2	104200-92350	DRIVER, SCREW	1							
28	2	104200-92600	BOX, TOOL	1							
29	2	28110-100120	SPANNER, 10X12	1							
30	2	28110-140170	SPANNER, 14X17	1							
31	2	28110-190220	SPANNER, 19X22	1							
32	2	28210-000140	OILER	1							

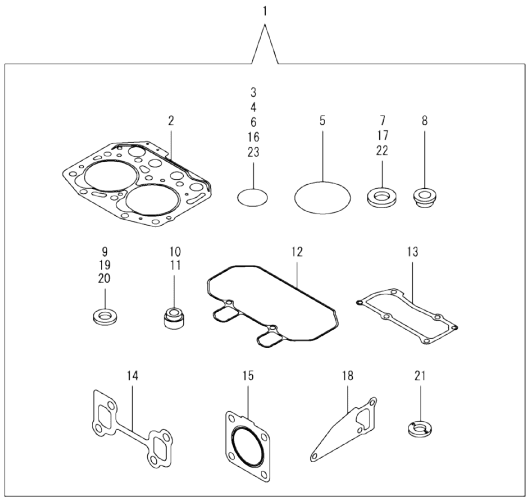

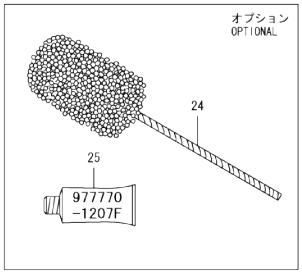

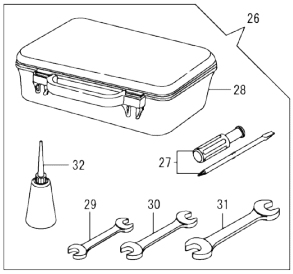

Remarks
(1) OPTIONAL PART.

N:Old ←Yes/No→ New. Q:Old ←No/Yes→ New. R:Old ←Yes/Yes→ New. S:Old ←No/No→ New. W:Add. Z:Discontinued. F:Interchangeable by set. K:Q'ty Change

Copyright (C) YANMAR CO., LTD. All RightsReserved.

Parts No. Index

Parts No.	Fig. No.	Ref. No.
101304-59020	14	15
101720-55750	14	34
102103-55520	14	5
		29
103854-39140	14	14
104200-55321	14	25
104200-55330	14	2
		26
104200-55341	14	27
104200-55750	14	9
		35
104200-92350	17	27
104200-92600	17	28
105010-11490	4	3
105025-59560	13	24
105230-59510	14	21
105311-01090	1	4
105312-59510	14	18
105425-01690	3	9
110250-55610	14	6
		30
114110-07760	14	23
114250-39450	9	11
118200-53010	13	2
118400-51370	11	48
119131-18320	6	5
119233-77712	16	20
119247-77100	16	29
119255-44660	10	42
119265-44740	10	18
119285-01990	1	6
119285-11990	4	11
119305-35151	9	4
119305-59120	13	15
119415-01330	1	27
	17	2
119415-01720	3	7
119415-11200	4	22
119415-11240	4	23
119415-11310	4	46
	17	12
119415-11320	4	47
119415-11330	4	48
	17	13
119415-11380	4	36
119415-11750	4	4
119415-13100	6	1
119415-13110	6	2
	17	14
119415-14581	7	3

Parts No.	Fig. No.	Ref. No.
119415-21700	8	1
119415-39211	9	12
119415-51030	11	5
119415-51400	11	49
119415-51500	11	64
119415-51700	11	94
119415-51710	11	95
119415-51750	11	96
119415-51760	11	97
119415-59540	13	25
119415-59810	13	20
119415-59820	13	21
119415-77820	4	56
119446-01620	3	2
119446-01770	3	8
119446-21580	8	8
119446-34801	9	1
119446-35080	9	6
119446-61200	12	5
119515-01200	1	26
119515-11101	4	13
119515-11110	4	14
119515-11280	4	27
119515-11800	4	21
119515-13200	6	7
	17	15
119515-14400	7	2
119515-22080	8	14
119515-22300	8	20
119515-22500	8	16
119515-22550	8	33
119515-22900	8	31
119515-23000	8	22
119515-23601	8	26
119515-23611	8	29
119515-42001	10	1
119515-42002	10	1 -1
119515-42020	10	12
	17	18
119515-42041	10	3
119515-42350	10	16
119515-44560	10	30
119515-44600	10	32
119515-51100	11	9
119515-53001	13	1
119515-53010	13	3
119515-77010	15	1
119540-59560	13	34
119540-59570	13	32
119540-77310	16	19

Parts No.	Fig. No.	Ref. No.
119546-12550	5	17
119546-61440	12	21
119600-11460	4	2
	17	9
119620-01750	3	3
119620-02020	1	7
119620-14200	7	1
119620-21941	8	13
119620-59700	13	36
119621-21681	8	12
119623-01250	1	5
119624-32040	2	18
	17	3
119629-49080	10	49
119643-66900	16	28
119643-77900	16	30
119650-77910	16	24
119653-77950	12	132
119660-01911	2	17
119660-61901	12	65
119717-01501	2	1
119717-01570	2	2
119717-01750	2	16
119717-01800	2	7
119717-02411	1	10
119717-02930	1	23
119717-03031	4	37
119717-03070	4	38
		39
119717-11131	4	15
119717-11190	4	17
119717-11260	4	26
119717-11340	4	18
	17	10
119717-11350	4	19
	17	11
119717-11650	4	28
119717-13600	6	3
119717-21650	8	11
119717-23200	8	25
119717-23910	8	28
119717-25050	7	9
119717-25101	7	10
119717-25911	7	14
119717-25930	7	16
119717-32050	2	19
	17	4
119717-32060	9	5
	17	16
119717-32080	2	9

Parts No.	Fig. No.	Ref. No.
119717-32100	2	8
119717-32110	2	13
119717-32120	2	14
119717-42031	10	2
119717-42320	10	11
119717-49800	10	22
119717-51060	11	6
119717-51070	11	7
119717-51150	11	13
119717-51190	11	15
119717-51200	11	16
119717-51300	11	43
119717-51330	11	46
119717-51420	11	51
119717-51480	11	110
119717-51490	11	111
119717-51570	11	70
119717-51860	11	99
119717-55650	14	11
119717-61050	12	2
119717-61060	12	3
119717-61070	12	4
119717-61120	12	8
119717-61130	12	9
119717-61140	12	10
119717-61150	12	11
119717-61201	12	70
119717-61400	12	14
119717-61500	12	30
119717-77800	4	55
119734-01580	2	3
119734-02220	3	4
119734-49010	10	45
119740-49060	10	44
119744-01521	2	5
119746-12560	5	18
119761-61560	12	88
119802-03100	4	40
119802-03110	4	41
119802-03121	4	42
119802-03131	4	43
119802-03141	4	44
119802-13620	6	4
119802-32130	2	15
119802-44560	10	40
119808-12520	5	4
119808-12540	5	5
119810-02941	1	34
119810-55340	14	3
119810-55650	14	8

Parts No. Index

Parts No.	Fig. No.	Ref. No.
119813-59950	13	37
119833-55620	14	1
119840-59570	13	35
119865-21600	8	10
119866-12541	5	6
119910-12510	5	3
119910-12601	5	2
119940-77270	16	22
119C10-42320	10	11 -1
121023-01551	2	30
121111-21501	8	7
121250-44901	10	26
121250-55620	14	7
121254-55510	14	4
121256-44600	10	41
121257-55720	14	31
121257-55731	14	32
121450-42450	10	25
121520-34810	9	2
121550-49111	10	24
121850-51960	2	20
	17	5
122710-51090	11	8
124060-01050	1	11
124064-55510	14	28
124066-59100	13	33
124160-01751	2	28
	4	35
124160-01910	1	12
124450-44510	10	34
124450-44530	10	36
124450-44550	10	39
124450-44560	10	37
124465-44950	10	27
		28
	17	20
124550-51350	11	47
124732-77970	16	36
124764-44810	10	43
124766-59050	10	53
	13	23
	14	17
		20
		40
126650-12680	5	7
129001-32320	2	11
129001-32330	2	12
129004-13200	6	8
129004-13500	6	9
129005-59830	9	13

Parts No.	Fig. No.	Ref. No.
129008-61301	12	74
129051-12530	5	8
129052-61390	12	13
129100-01580	3	1
	8	2
129100-35140	9	3
129100-51560	11	69
129100-51570	11	71
129100-52101	11	115
129107-44590	10	31
129115-91250	16	31
129115-91270	16	33
129150-11230	4	29
129150-11750	4	31
129150-25301	7	15
129150-49080	10	47
129150-49100	10	46
129150-59131	13	18
129155-51020	11	4
129155-51140	11	12
129155-51280	11	41
		42
	12	6
129155-51450	11	59
129155-51521	11	65
129155-51530	11	66
129155-51540	11	67
129155-51550	11	68
129155-51580	11	73
129155-51591	11	74
129155-51600	11	20
		75
129155-52051	11	114
129155-61341	12	75
129155-61450	12	22
129155-61460	12	76
129155-61480	12	24
129155-77925	16	35
129156-61460	12	23
129209-61370	12	12
129209-61920	12	78
129209-61930	12	130
129209-61970	12	131
129210-49280	10	51
129210-59050	14	16
129210-59110	13	22
129210-59140	14	19
		39
129211-77920	16	27
129259-12570	5	14

Parts No.	Fig. No.	Ref. No.
129335-55700	14	24
129350-49530	10	21
129400-92410	17	24
129457-44760	10	19
129486-61540	12	49
129486-61650	12	59
129508-11180	4	16
129573-61700	12	121
129612-12560	5	10
129612-12590	5	12
129612-12650	5	9
129612-12701	5	1
129612-42340	10	17
129900-32130	2	10
129901-11450	4	1
	17	8
129901-53800	13	4
129901-59560	13	31
	17	21
129972-77341	16	23
158552-61700	12	60
158552-61710	12	64
158552-61900	12	77
158600-51170	11	14
158600-51270	11	40
158600-51410	11	50
158600-51420	11	52
158600-51442	11	53
158600-51570	11	72
158600-51790	11	98
158601-61700	12	122
170038-91310	16	34
171081-55910	14	36
171301-77201	16	1
172437-03391	10	29
174307-51700	12	31
22190-080002	9	14
		16
	17	17
22190-100002	12	79
22190-120002	12	80
	13	43
	14	22
	17	22
22190-160002	3	11
	11	100
	17	7
22217-120000	11	101
22242-000120	4	32
22252-000220	8	21

Parts No.	Fig. No.	Ref. No.
22272-000030	12	66
22351-050010	11	102
22351-060012	4	20
22372-040000	12	81
22512-040120	8	5
22857-500100	4	49
		50
22857-500160	4	51
23000-054000	5	16
23000-060000	5	13
		15
		19
23010-038000	10	54
23061-070230	10	38
23414-080000	10	13
	17	19
23414-120016	12	133
23418-060000	14	37
23857-030000	9	15
23876-005000	4	12
23876-030000	2	6
23887-100002	12	82
24101-060034	11	103
24101-063034	11	104
24104-062010	16	5
24311-000320	2	29
	4	52
	17	6
24311-240100	14	10
		38
24316-000150	11	105
24341-000070	12	67
24341-000240	2	31
	17	23
26014-060122	10	33
26014-080702	14	12
		42
26022-050122	11	106
26022-060162	11	107
26106-050102	11	108
26106-060102	9	10
	12	68
		83
26106-060122	2	21
	3	12
	7	8
26106-060142	12	84
26106-060162	2	22
		32
26106-060202	4	53

Parts No. Index

Parts No.	Fig. No.	Ref. No.
26106-060202	12	85
26106-060252	3	13
26106-060352	7	13
26106-060402	2	23
		24
26106-060452	3	14
	10	20
	12	86
26106-060602	2	25
26106-060652	2	26
26106-060752	4	54
26106-080122	10	14
26106-080162	14	13
26106-080202	10	23
	16	21
26106-080402	4	34
26106-080502	10	15
26106-100252	15	35
26106-100452	16	18
26206-100252	3	5
26206-100302	3	6
26306-080002	2	27
	6	6
26366-080002	12	69
26577-060122	10	9
26716-120002	11	109
26756-060002	12	87
26979-050162	4	33
27241-120000	1	13
27241-250000	10	10
28110-100120	17	29
28110-140170	17	30
28110-190220	17	31
28210-000140	17	32
719415-01561	1	1
719415-92620	17	1
719446-51350	11	1
719717-02901	1	28
719717-02911	1	31
719734-01510	2	4
721400-92102	17	26
977770-01212	17	25
X0280210331	15	23
X0280335360	15	33
X0280626010	15	12
X0280996180	15	3
X0281007680	15	2
X0282005871	15	6
X0283006960	15	7
X0284105040	15	13

Parts No.	Fig. No.	Ref. No.
X0284525010	15	27
X0285007030	15	10
X0285105190	15	4
X0285205030	15	5
X0286105010	15	15
X0286305010	15	17
X0286355010	15	18
X0287405140	15	19
X0534007800	15	20
X1289510130	15	34
X2A07073KA	16	3
X3A08877KA	16	11
X417878	16	6
X4284001590	15	8
X4A07023KB	16	4
X4A07403K01	16	13
X9055715000	15	21
X9490065670	15	32
X9490138090	15	25
X9490138100	15	26
X9490138110	15	24
X9490423520	15	30
X9490560750	15	29
X9490562360	15	28
X9490721360	15	22
X9491034320	15	16
X9491034330	15	14
X9491040990	15	11
X9491050100	15	9
XM069000000	16	7
XM08137	16	2
XM219230000	16	16
XM329830000	16	10
XM67935	16	14
XM721740000	16	12
XM860250000	16	15
XM863720000	16	17
XYSPS400800	16	9
XYSPS402400	16	8

Parts No.	Fig. No.	Ref. No.

Parts No.	Fig. No.	Ref. No.